PureVac

PREMIER 2141-2 with ACS

PREMIER SERIES BENCHTOP VACUUM PACKER, SENSOR CONTROL & ADVANCED CONTROL SYSTEM (ACS)

The Premier series of benchtop vacuum packaging machines offers the ultimate in vacuum sealing technology all incorporated as standard into one unit.

STANDARD FEATURES

- Stainless steel housing and deep-drawn vacuum chamber for optimal hygiene
- Removable wireless sealing bar
- Insert plates for adjusting vacuum chamber height
- Vacuum - Optimal final vacuum 99.80% (2 mbar)
- Soft-air - Controlled ventilation for protection of product and packaging
- 2 x 3.5mm seal wires for an extra-strong double seal
- Sensor Control - Set percentage pressure for vacuum and gas functions for accurate and constant packaging results / Automatic programming / 10 default programs / Vacuum plus time / Liquid Control
- Stop button for partial / full cycle interruption
- Digital maintenance program for pump / Operating hours counter / Service indicator programs / Sleeper function etc
- Service kit for user maintenance

ADVANCED CONTROL SYSTEM (ACS) FEATURES

- Easy to use - 4.7 inch full colour LCD screen
- Intuitive programming based on icons + animated process steps
- 20 personalised programs - settings can be made on PC
- Settings can be saved ensuring consistent results every time
- Secured access. 3 different access levels with authorisation codes - User / Owner / Dealer
- Customised screen saver / logo
- Real time / date displayed
- Special programs - red meat, marinating, tenderising, sequential & external vacuum.

OPTIONAL FEATURES

- Zebra label printer
- Inclined insert plate for packing liquid products
- Trolleys with 3 shelves and lockable castors
- Gas-flush - Injecting food-gas for product protection and longer shelf life
- CUT-OFF Seal Bar

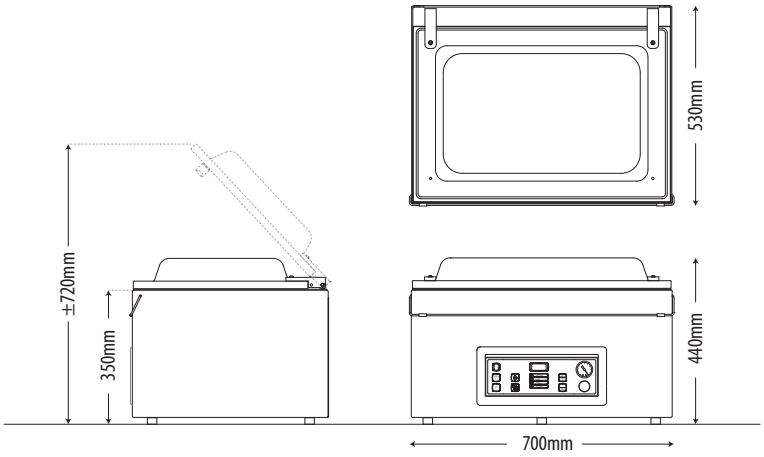

DIMENSIONS	
External dimensions: 700W x 530D x 440H mm	
Chamber: 520W x 410D x 185H mm	
Sealing Bar: 2 x 410mm	
TECHNICAL DATA	
Power supply:	240V, 50Hz, Single Phase
Power output:	1.0kW
Capacity pump:	21 m³/h
Machine cycle:	15-35 seconds
Weight:	66kg

SPECIFICATIONS ARE SUBJECT TO CHANGE WITHOUT NOTICE.

Busch vacuum pumps, world leaders in vacuum pump technology.

Two years parts & labour warranty

COMCATER - foodservice equipment

National Head Office
156 Swann Drive
Derrimut VIC 3026
Tel: +61 3 8369 4600
Fax: +61 3 8369 4699

Melbourne
96-100 Tope Street
South Melbourne VIC 3205
Tel: +61 3 8699 1200
Fax: +61 3 8699 1299

Sydney
20/4 Avenue of the Americas
Newington, NSW 2127
Tel: +61 2 8775 9500
Fax: +61 2 9648 4762

Brisbane
1/62 Borthwick Avenue
Murarrie QLD 4172
Tel: +61 7 3900 2700
Fax: +61 7 3399 5311

Perth
Unit 16, 7 Abrams Street
Balcatta, WA 6021
Tel: +61 8 6217 0700
Fax: +61 8 6217 0799

www.comcater.com.au