Specification

VarioCooking Center MULTIFICIENCY® 112+ (2x12 dm², 2x14 l)

Reference number: VCC112+

VarioCooking Control® - 7 process groups

Function: VarioCooking Control® mode
In the 7 cooking modes (meat, fish, vegetables and side dishes, egg dishes, soups and sauces, dairy products and desserts, finishing® and service) VarioCooking Control® automatically detects the product-specific requirements, the size of the food to be cooked and the load size. The cooking time and temperature are continuously adjusted to achieve the result you want. The operator is actively guided through the cooking processes. The remaining cooking time is displayed.

Manual mode

Boiling: 30°C - BoilingT

Frying: 30°C - 250°C

Deep frying: 30°C - 180°C

VarioBoost®

patented, net-type heating system for absolutely even and precise temperature transmission

Program – mode

The program management function allows to create own programs, save and manage VarioCooking Control® processes and programs with individual settings.

Description
- Multifunctional cooking appliance for boiling, frying and deep frying, VarioCooking Control® - mode to automatically cook meat, fish, vegetables and side dishes, egg dishes, soups and sauces, dairy products and desserts, finishing® and service.
- Manual mode for most of the cooking methods used in commercial kitchens. Suitable for boiling, frying and deep frying
- With two pans that can be operated independently of one another
- Pressure cooking (controlled by controlling the pressure and heat for optimum water and energy savings).
- Temperature range: 30 - 250°C

Working safety
- Cooking or washing water is emptied directly through the pan (without tilting and without floor drain)
- Operating and warning display, e.g. hot oil when deep frying
- Safety temperature limiter
- Maximum temperature of the pan sides 70°C

Operation
- 8.5" TFT colour monitor and touch screen with self-explanatory symbols for ease of operation
- Central dial with “Push“ function to confirm entries
- Application and user manuals can be called up on the unit display for the current action

Features
- Core temperature probe with 6 measuring points with patented core temperature probe holder
- VarioDose automatic highly accurate water filling device
- Fixed waste water connection possible as unit incorporates integral pipe isolating section
- VarioBoost® patented heating system
- Cooking process control with microprocessor
- Integral hand shower with automatic retracting system and infinitely variable jet strength
- Integral socket
- USB port
- Ethernet
- Integral ON/OFF switch
- Variable foreign language display for messages from the unit
- Temperature unit can be toggled between °C and °F
- Digital temperature displays
- Actual and target value displays
- Digital timer, 0-24 hours with permanent settings, may be toggled between hour/min and min/sec
- 24-hour real-time clock
- Material: stainless steel DIN 1.4301, inside and outside
- Seamless hygienic pan with rounded corners
- Cooking pan tilted by electric cylinder
- Service Diagnostic System with service messages displayed automatically
- Protection class IP X5

Additional functions
- AutoLift raising and lowering device (baskets for boiled and deep-fried food)
- HACCP datamemory and outputting via USB port
- Individual programming of 350 cooking programs
- Delta-T cooking
- Energy efficiency tested according to DIN 18873 and consumption values published in database HKI CERT (Germany): http://grosskuechen.cert.hki-online.de/en

Installation
- Fixed waste water connection possible as unit incorporates integral pipe isolating section
- Can be set up without a floor drain
- Height-adjustable unit feet 150 to 175 mm
- All VarioCooking Center MULTIFICIENCY® units are compatible with units and tables 850 mm height

Approval

FRIMA AUSTRALIA PTY LTD
Subsidiary of Comcater Pty Ltd
We reserve the right to make technical improvements.
156 Swann Drive, Derrimut, VIC 3030
Phone: (03) 8369 4600 Fax: (03) 8369 4699
Email: sales@frima-australia.com.au Web: www.frima-online.com

Specification/Data sheet

VarioCooking Center MULTIFICIENCY® 112+ (2x12 dm², 2x14 l)

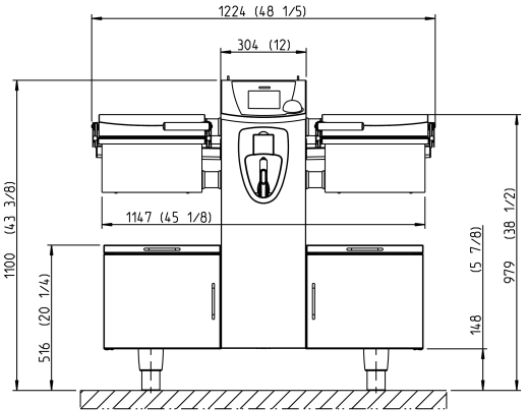

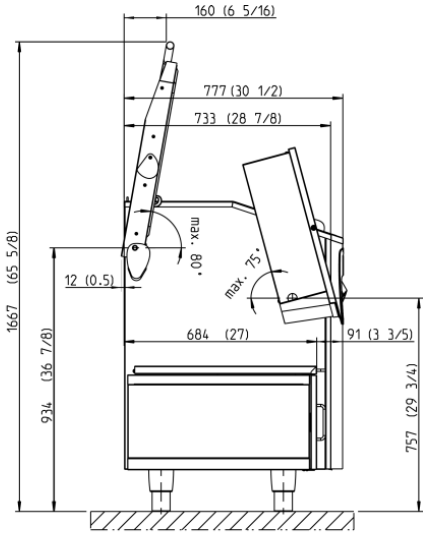

1. Drain connection DN40
2. Water supply cold G3/4
3. Electrical connection

Measurements in mm (inch)

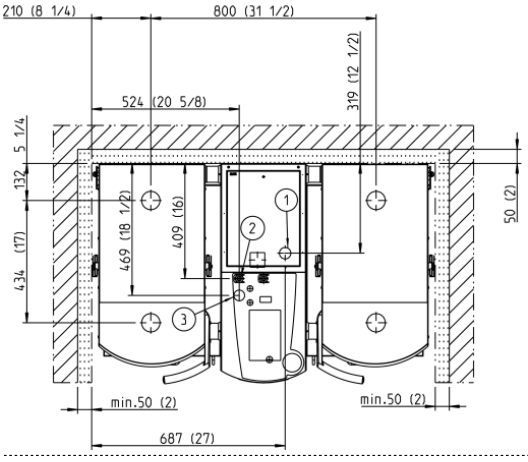

Technical Info

Working capacity Volume :	2 x 14 litre	**Water connection cold water:**	R3/4" for 1/2" pressure hose	**Connected load with socket under full power**:**	20 kW - 3NAC 415V
Pan Volume [WxDxH]:	275 x 445 x 130 mm	**Water pressure:**	150-600 kPa (300kPa recommended)	**Connected load with socket and VitroCeran**:**	23 kW - 3NAC 415V
Area [dm²]:	2 x 12 dm²				
Capacity baskets:	2 x 1 kg				
Width:	1224 mm	**Drain connection:**	DN 40	**Fuse***:**	40 A
Depth:	777 mm	**Thermal load latent:**	4845 W (285 W/kW)	**Incoming cable***:**	5 x 6 mm²
Height:	1100 mm	**Thermal load sensitive:**	972 W (57 W/KW)	**Maximum socket power:**	2,3 kW (10 A)
Weight:	186 kg	**Recommended air extraction rate*:**	763 m³/h		
Height of pan edge:	900 mm				

Installation

- *In normal operation according to VDI 2052 (application mix 60% boiling, 38% frying, 2% deep-frying). In case of differing application prior to the construction of the room ventilation system, consult FRIMA
- **Special voltages on request
- ***Values shown are for a maximum cable length of 2 m. It is the responsibility of the person installing the unit to adjust these values according to the length of cable which will be in use.
- Installations must comply with all local electrical, plumbing and ventilation codes in accordance with IEC 364 or relevant National Standard.
- Socket power is protected by an internal residue current device in accordance with AS/NZS 3000

FRIMA AUSTRALIA PTY LTD
Subsidiary of Comcater Pty Ltd
We reserve the right to make technical improvements.

156 Swann Drive, Derrimut, VIC 3030
Phone: (03) 8369 4600 **Fax:** (03) 8369 4699
Email: sales@frima-australia.com.au **Web:** www.frima-online.com

Specification/Data sheet

VarioCooking Center MULTIFICIENCY® 112+ (2x12 dm², 2x14 l)

Options
- VitroCeran with frame
- Stand with doors
- Connection to Sicotronic (others on request)
- Hot water connection
- Without deep-frying mode
- Special voltages on request
- with signal SOLAS
- stainless steel feets

Accessories
- Scraper
- Arm for automatic raising/lowering device
- Boiling and deep-frying basket
- Bain Marie Kit
- Colander
- Rack
- VarioMobil®
- UltraVent® condensation hood
- Kit for mouting on casters
- Kit for mouting on a plinth
- Kit for back drain
- Water connection kit
- ConnectedCooking - the networking solution for professional kitchens

FRIMA AUSTRALIA PTY LTD
Subsidiary of Comcater Pty Ltd
We reserve the right to make technical improvements.

156 Swann Drive, Derrimut, VIC 3030
Phone: (03) 8369 4600 **Fax:** (03) 8369 4699
Email: sales@frima-australia.com.au **Web:** www.frima-online.com